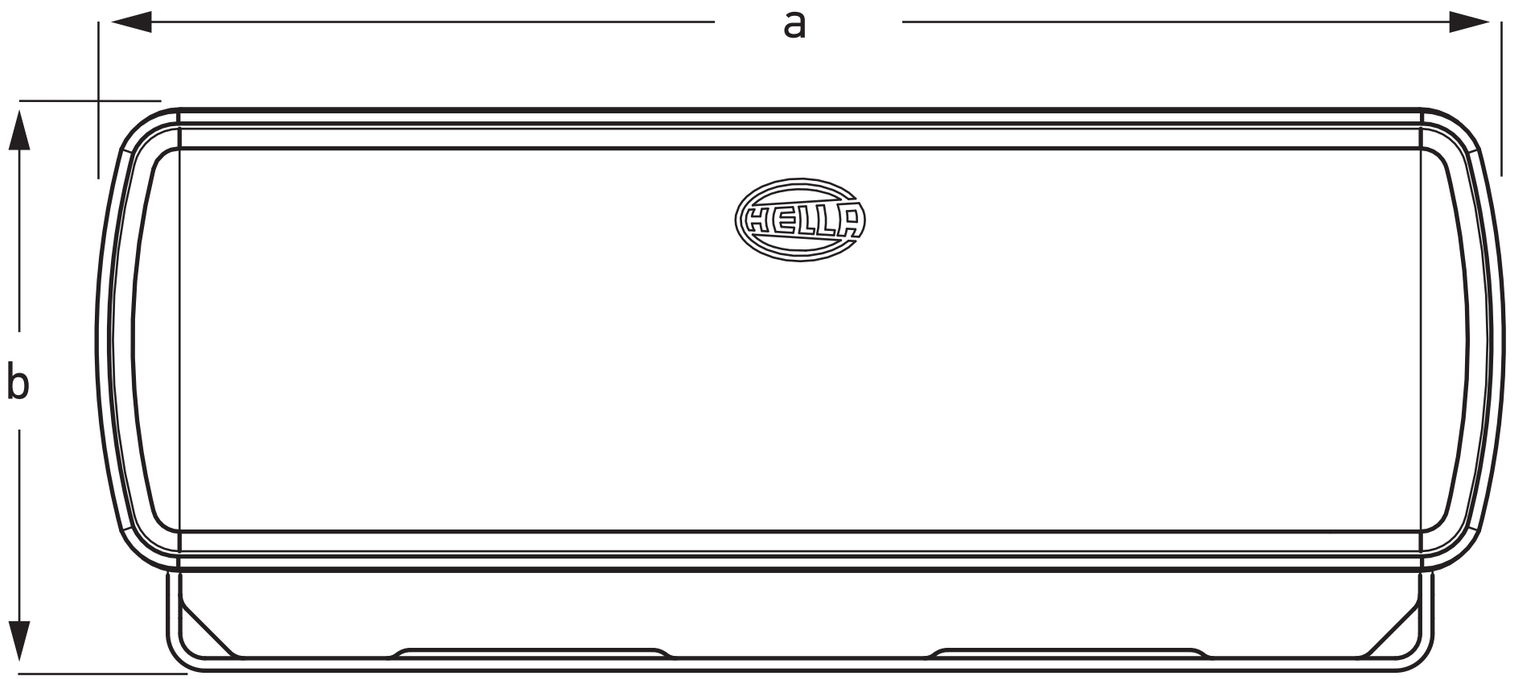

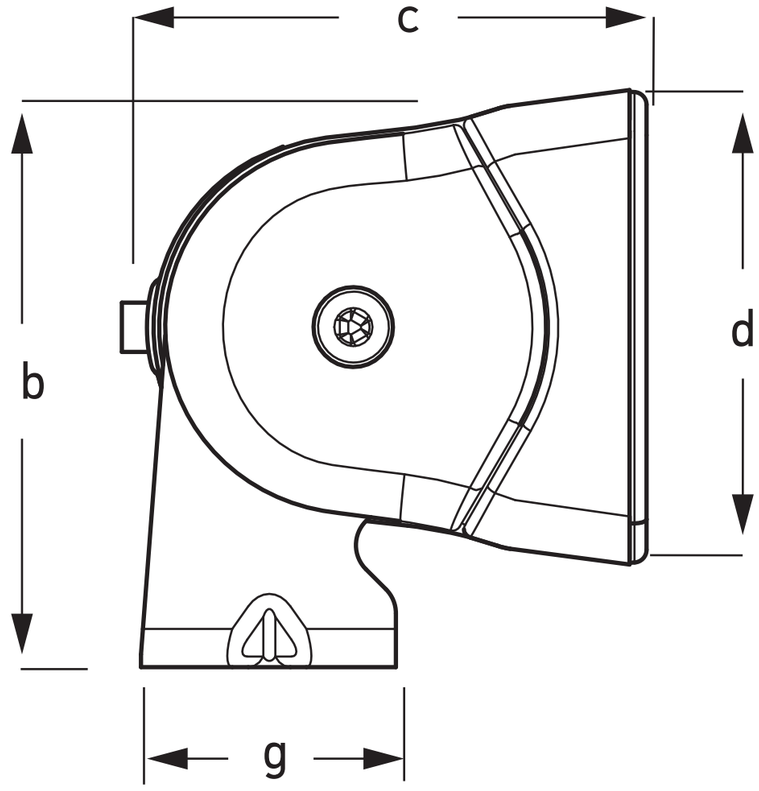

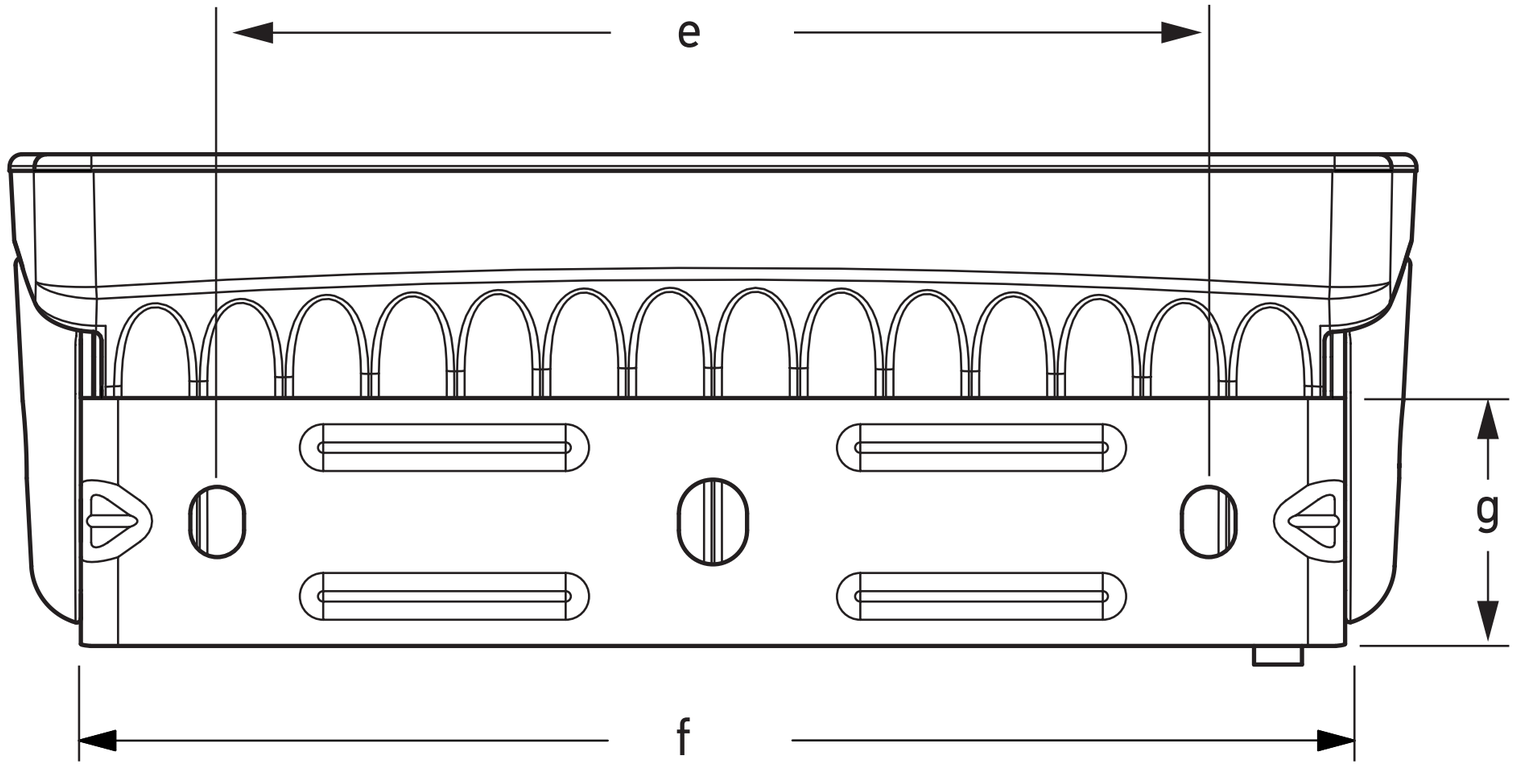

Dimensions

a = 170mm / 6.69”
b = 68mm / 2.68”
c = 58mm / 2.28”
d = 55mm / 2.17”
e = 120mm / 4.72”
f = 154mm / 6.06”
g = 30mm / 1.18”